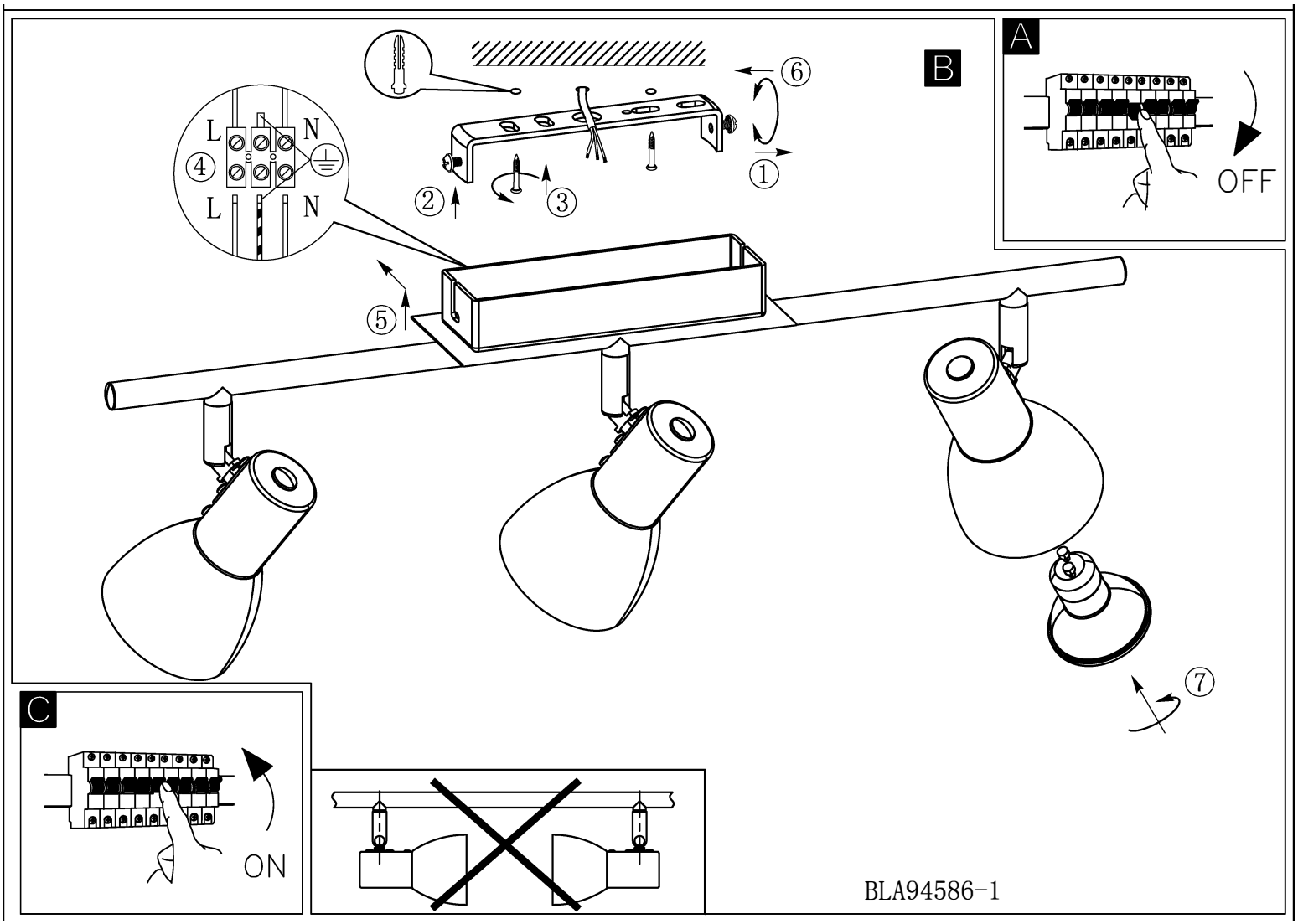
A
OFF
B
L
N
④
L
N
⑥
①
②
③
⑤
⑦
C
ON
BLA94586-1